23ECE381

Open Laboratory I

CB.EN.U4ECE23212	CHITTESH S
CB.EN.U4ECE23246	SRICHARAN R P
CB.EN.U4ECE23249	SUJITH KRISHNA P G

Group ID: 23ECE381C10

For Correct Password:

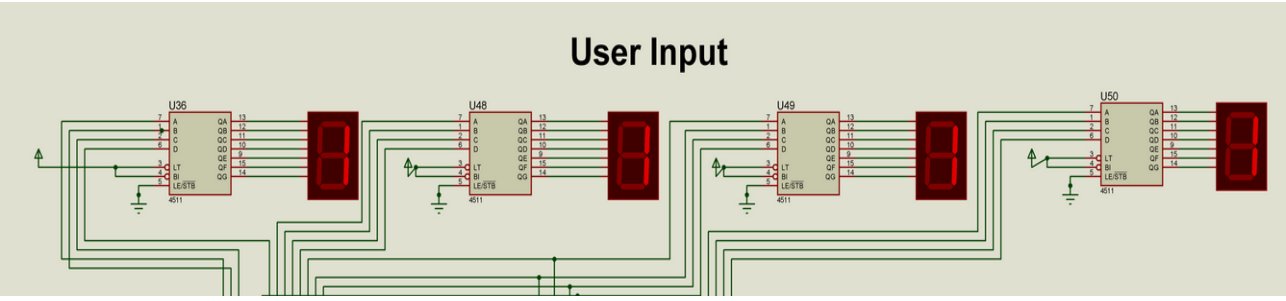

Fig. 1 User enters code 1111 for the digital lock

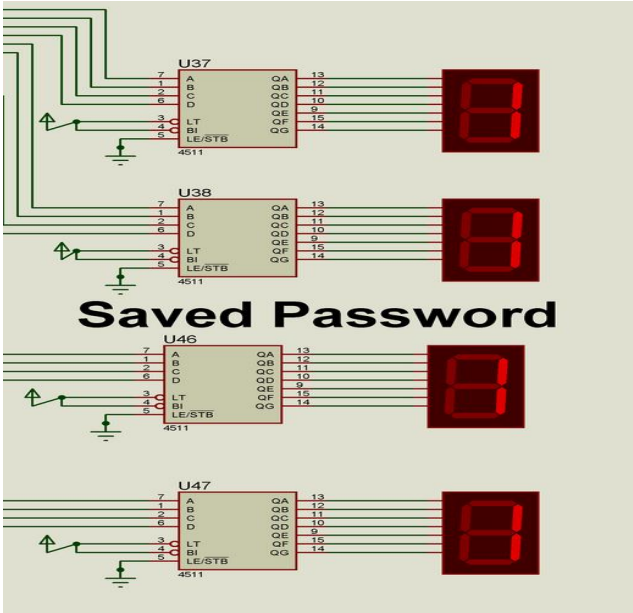

Fig. 2 Saved Password is 1111 for the digital lock

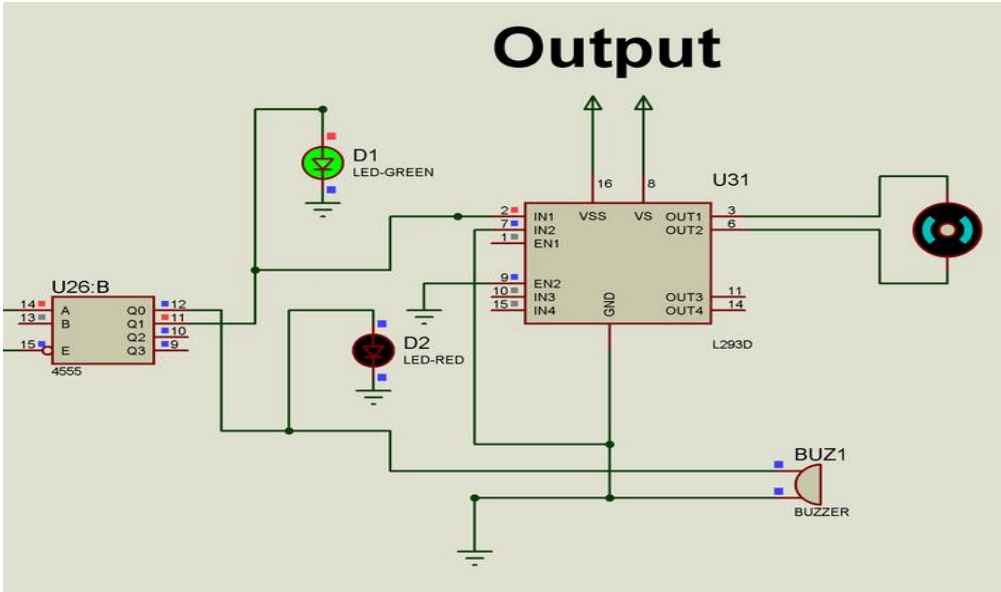

Fig.3 Password match, Green LED and Motor runs

For Incorrect Password:

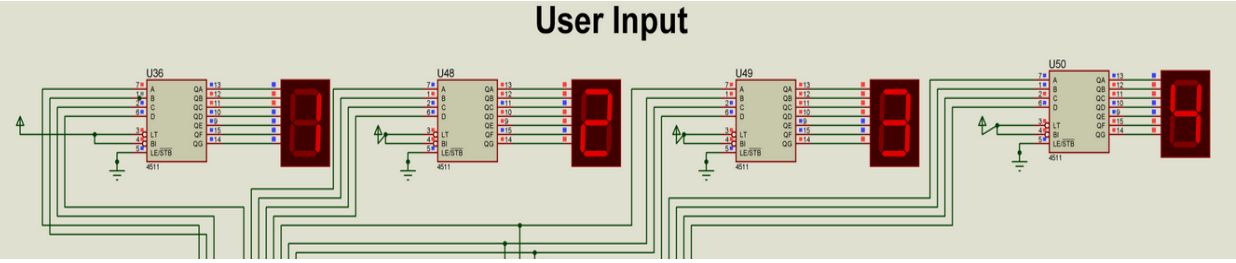

Fig. 4 User enters code 1234 for the digital lock

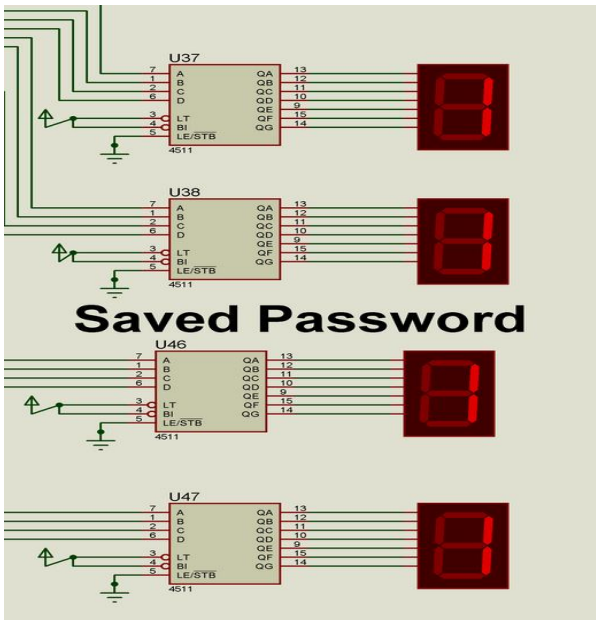

Fig. 5 Saved Password is 1111 for the digital lock

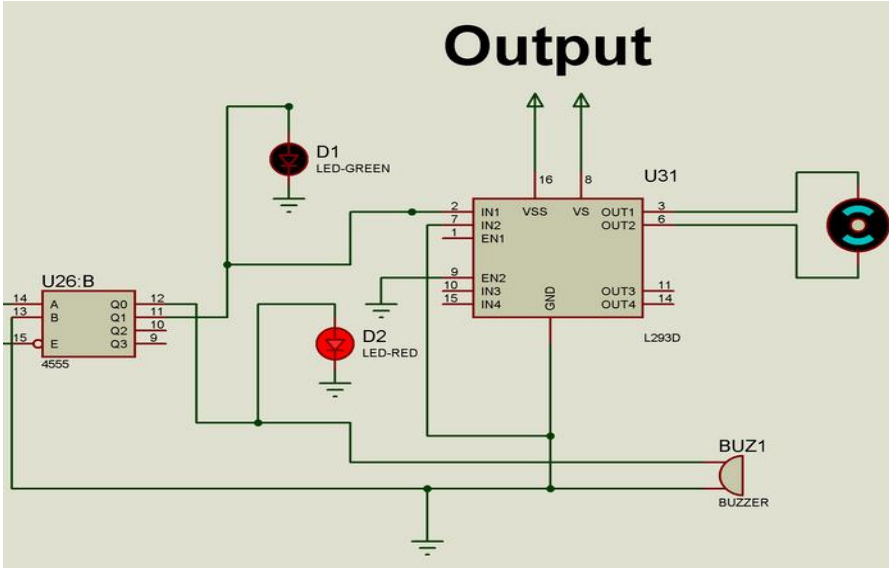

Fig.6 Password mismatch, Red LED and Buzzer runs